Parts Catalog



GHP24G

Gas Cooking Equipment
Hot Plate
Model: GHP24G

08/14/2023 Rev B
IMPORTANT!
TO EXPEDITE SHIPMENT OF PARTS, ALWAYS SPECIFY MODEL, REV,
PART NUMBER, AND SERIAL NUMBER OF UNIT.

GLOBE FOOD EQUIPMENT COMPANY
2215 East River Road
Dayton, Ohio 45439

Parts Department
Toll Free 1-800-745-6238 · Fax (937) 290-0585
E-Mail: info@globefoodequip.com
Website: www.globefoodequip.com

Not for resale

© Globe Food Equipment Company, 2023

Table of Contents

Description	Page
GHP24G Hot Plate Components	4
GHP24G Gas Orifice Elevation Chart	6

GHP24G Hot Plate Components

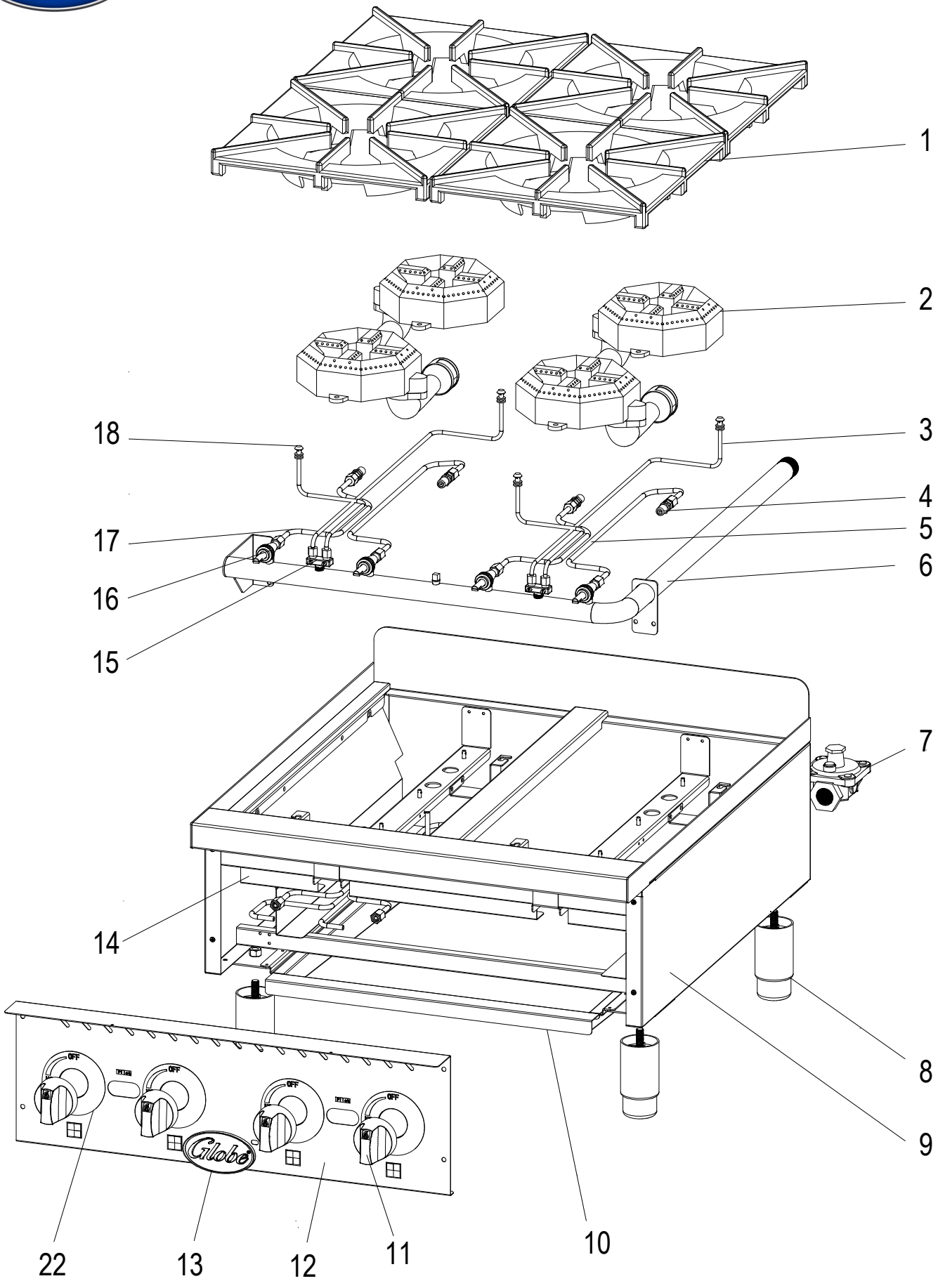

© Globe Food Equipment Company

GHP24G Hot Plate Components

Item	Part Number	Description	Qty	Serial Number
1	U01072	Trivet	4	
2	U02042	Burner Assembly	4	
3	U01537	Back Pipe, Pilot Assembly	2	1814084553 ->
4	U06051470693	Hood Orfice #54	4	
4	U06051470695	Hood Orfice (2 Pack) #46	4	
4	U06051470929	Hood Orfice #47	4	
4	U06051470836	Hood Orfice (2 Pack) #55	4	
4	U06051470881	Hood Orfice (2 Pack) #48	4	
4	U01201068649	Hood Orfice #49	4	
4	U06051470896	Hood Orfice #56	4	
4	U01201068651	Hood Orfice #51	4	
5	U02003	Rear Gas Pipe	2	
6		Manifold Assembly	1	
7	U01221069501	Regulator	1	
8	U01021005165	Foot	4	
9		Main Enclosure	1	
10	U01082	Drip Tray	1	1814084553 ->
11	U01021005188	Control Knob	4	
12	U03035	Front Panel	1	
13	U01021005383	Globe Badge	1	
14		Isolating Plate Front	2	
15	U01201068502	Manual Control Valve (A18)	2	
16	U01201068508	Pilot Valve	4	
17	U02004	Front Gas Pipe	2	
18	U01536	Front Pipe, Pilot Assembly	2	1814084553 ->
19	U01021005186	Ignition Bar Not Shown	1	
20		Fixture Block, Pilot Pipe Not Shown	4	
21	U03021	Top Support Bar Not Shown	1	
22	U04031317503	Control Knob Overlay	1	

© Globe Food Equipment Company

GHP24G Gas Orifce Elevation Chart

Model	Rated Input Per Burner (BTU/HR)	Elevation		Elevation	
		0-2000 ft		2000 - 4000 ft	
		Nat	LP	Nat	LP
Hot Plate	22500	U06051470695 (#46)	U06051470693 (#54)	U06051470929 (#47	U06051470836 (#55)
		Elevation		Elevation	
		4000 - 6000 ft		6000 - 8000 ft	
		Nat	LP	Nat	LP
Hot Plate	22500	U06051470881 (#48)	U06051470836 (#55)	U01201068649 (#49)	U06051470896 (#56)
		Elevation			
		8000 - 10000 ft			
		Nat	LP		
Hot Plate	22500	U01201068651 (#51)	U06051470896 (#56)		

© Globe Food Equipment Company